GPON OLT SFP Transceiver Class C++



Functional Feature

- SC BIDI SFP Single Mode Transceiver
- 1490nm Continuous Mode 2.488 Gbps DFB Transmitter
- 1310nm Burst Mode 1.244 Gbps APD-TIA Receiver
- Single +3.3 Power Supply, Hot-pluggable
- LVTTL receiver Fast Burst Packet Detect indication
- Burst mode received signal strength indication (RSSI) function
- Complies with Telcordia (Bellcore) GR-468-CORE
- Compliant with SFP MSA and SFF-8472
- Complies with ITU-T G.984.2 Class C++

Product Applications

- GPON OLT For P2MP Application

General

The AS60-PG43207-CPSS7 transceiver with supports data rate of typical 2.488 Gbps for GPON OLT application up to 20km transmission distance, it's designed meeting with ITU-T G.984.2 Class C++ specifications. SC rececptacle is for optical interface.

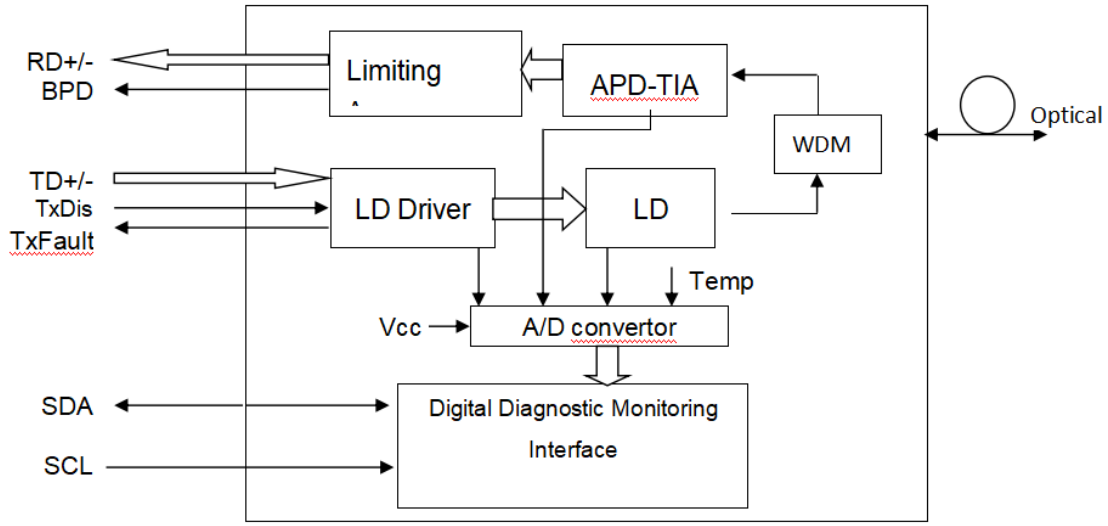

Fig 1 Transceiver Block Diagram

The module provides digital diagnostic information of its operating conditions and status, including transmitting power, laser bias, receiver input optical power, module temperature, and supply voltage. Calibration and alarm/warning threshold data are written and stored in internal memory (EEPROM). The memory map is compatible with SFF-8472, as shown in Fig. 2. The diagnostic data are raw A/D values and must be converted to real world units using calibration constants stored in EEPROM locations 56 – 95 in A2h.

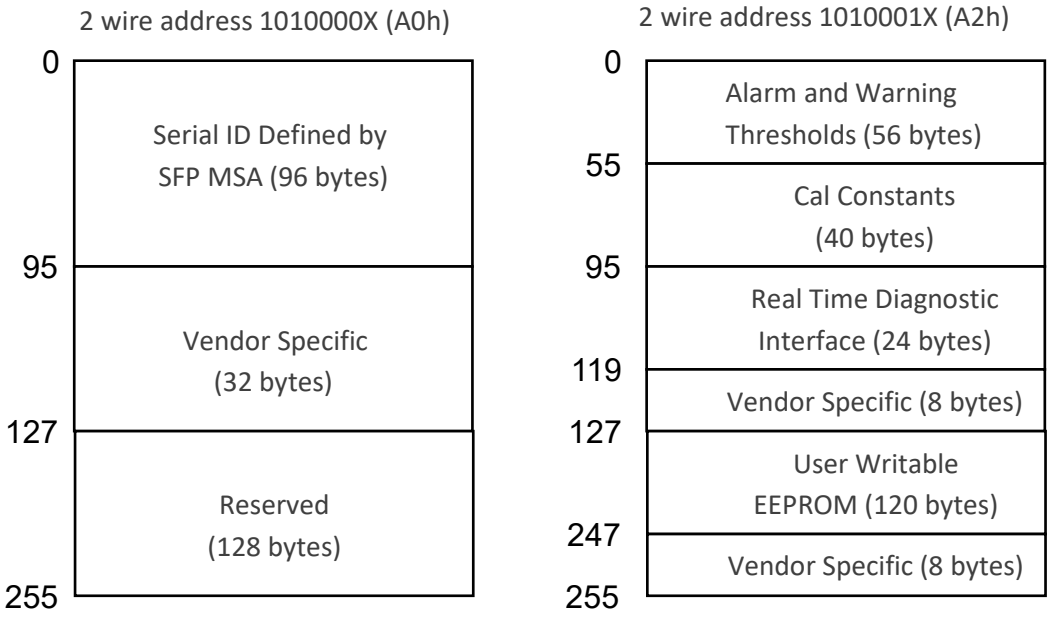

Fig 2 EEPROM Information

Performance Specification

Absolute Maximum Ratings					
Parameter	**Symbol**	**Min.**	**Max.**	**Unit**	**Note**
Storage Temperature	Tst	-40	+85	°C	
Operating Case Temperature	Tc	0	70	°C	
Input Voltage	-	GND	Vcc	V	
Power Supply Voltage	Vcc-Vee	-0.5	+3.6	V	

Recommended Operating Conditions						
Parameter	**Symbol**	**Min.**	**Typical**	**Max.**	**Unit**	**Note**
Power Supply Voltage	Vcc	3.135	3.3	3.465	V	
Operating Case Temperature	Tc	0	-	70	°C	
Data Rate	TX	-	2.488	-	Gbps	
	RX	-	1.244	-		
Total Supply Current	-	-	-	400	mA	
Damage Threshold For Receiver	-	-	-	4	dBm	

Optical Specification						
Transmitter						
Parameter	**Symbol**	**Min.**	**Typ.**	**Max.**	**Unit**	**Note**
Optical Central Wavelength	λ	1480	1490	1500	nm	-
Spectral Width (-20dB)	Δλ	-	-	1	nm	-
Side Mode Suppression Ratio	SMSR	30	-	-	dB	-
Average Optical Output Power	Po	+4	+7	+10	dBm	-
Extinction Ratio	Er	9	-	-	dB	-
Rise/Fall Time	Tr/Tf	-	-	150	ps	-
Transmitter Total Jitter	Jp-p	-	-	0.1	UI	
Transmitter Reflectance	RFL	-	-	-12	dB	
Average Lauched Power of Off Transmitter	Poff	-	-	-39	dBm	-
Differential Input Voltage	VIN-DIF	300	-	1600	mV	-
Tx Disable Input Voltage-Low	VIL	0	-	0.8	V	-

Tx Disable Input Voltage-High	VIH	2.0	-	Vcc	V	-
Output Eye	Compliant with ITU-T G.984.2					
Receiver						
Parameter	**Symbol**	**Min.**	**Typ.**	**Max.**	**Unit**	**Note**
Operate Wavelength	-	1280	1310	1340	nm	-
Sensitivity	Pr	-	-	-30	dBm	-
Saturation	Ps	-10	-	-	dBm	-
LOS assert Level	-	-45	-	-	dBm	-
LOS De-Assert Level	-	-	-	-30	dBm	-
LOS Hysteresis	-	0.5	-	5	dB	-
Receiver Optical Reflectance	-	-	-	-12	dB	-
Data Output Low	Vol	-2	-	-1.58	V	-
Data Output High	Voh	-1.1	-	-0.74	V	-
LOSOutput Voltage-Low	VSD-L	0	-	0.8	V	-
LOS Output Voltage-High	VSD-H	2.0	-	Vcc	V	

Note:

1. Minimum Sensitivity and saturation levels for an NRZ 223-1 PRBS. BER≤10-10, 1.244Gpbs, ER=9dB

EEPROM Information

Alarm and Warning Thresholds (Serial ID A2H)

Parameter(Unit)	**C Temp ℃)**	**Voltage V)**	**Bias mA)**	**TX Power dBm)**	**RX Power dBm)**
High Alarm	100	3.6	90	+8	-10
Low Alarm	-10	3	0	+4	-30
High Warning	95	3.5	70	+7.5	-11
Low Warning	0	3.1	0	+5	-29

Digital Diagnostic Monitor Accuracy

Parameter	**Unit**	**Accuracy**	**Range**	**Calibration**
Tx Optical Power	dB	±3	Po: -Pomin~Pomax dBm, Recommended operation conditions	External/Internal

Rx Optical Power	dB	±3	Pi: Ps~Pr dBm, Recommended operation conditions	External/Internal
Bias Current	%	±10	Id: 1-100mA, Recommended operating conditions	External/Internal
Power Supply Voltage	%	±3	Recommended operating conditions	External/Internal
Internal Temperature	℃	±3	Recommended operating conditions	External/Internal

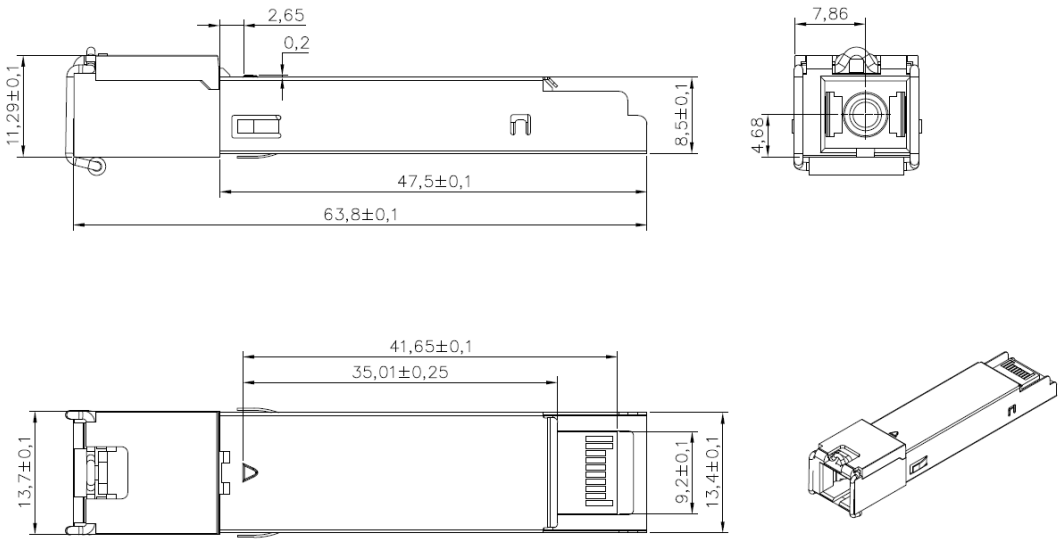

Package Diagram

Ordering information

Ordering P/Ns	Description
AS60-PG43207-CPSS7	GPON OLT Class C++, 20km, TX 1490nm 2.488Gbps, RX 1310nm 1.244Gbps, SFP form-factor, SC/UPC Receptacle connector, 0~70˚C