SFP+ OLT Transceiver

XGS-PON/GPON Combo OLT Quadplexer

Product Description

The transceiver is a combination of XGS-PON OLT and GPON OLT optical transceiver in an SFP+ housing. It is designed to support both the XGS-PON OLT and the GPON OLT specifications over a single fiber via coarse wave division multiplexing. The XGS-PON bidirectional link is configured with 1270nm/1577nm optics and the GPON link is configured with 1310nm/1490nm optics. The 1270nm and 1310nm optical burst mode receivers incorporate APD/TIA optics for maximum sensitivity. The 10G transmitter incorporates a 1577nm EML laser assembly and the 2.5G transmitter incorporates a 1490nm DFB laser assembly. The transmitters can be controlled by the LVTTL Tx_DISABLE function and the receivers incorporates the LVTTL Rx_SD output. The transceiver is designed to support up to 128/256 subscribers over distances of up to 20km.

Features

- SFP+ Package
- 3.3V DC power supply
- 4 Lambda
- SC receptacle optical connector
- Hot pluggable
- 2x10 SFP+ Electrical Interface
- ITU-T G.984.2 Class C+ compliant
- ITU-T G.987.2 Class C+ compliant
- ITU-T G.9807.1 Class C+ compliant

Applications

- 10 Gigabits Access networks
- FTTH
- FTTB
- FTTC

Optical Transmitter

- 1577nm CW Mode EML
  - 9.95328Gb/s data rate
  - LVCML AC Coupled input
- 1490nm CW Mode DFB Laser
  - 2.48832Gb/s data rate
  - LVPECL AC Coupled input

Optical Receiver

- 1270nm Burst Mode APD/TIA receiver
  - 9.95328 or 2.48832Gb/s data rate
  - LVCML DC Coupled output
- 1310nm Burst Mode APD/TIA receiver
  - 1.24416Gb/s data rate
  - LVPECL DC Coupled output

Control and Monitor Interface

- LVTTL Tx_Disable
- LVTTL Rx_SD_GPON
- LVTTL Rx_SD_XGS-PON
- LVTTL Rx_RSSI_Tri
- LVTTL Rx_Reset_GPON
- Tri-level Ratesel/Reset_XGSPON

I^2C Serial Data

- SCL Serial Clock Input
- SDA Serial Data I/O

Ordering Information

Part Number	ODN Class	Latch Type		Temperature Range		RoHS Compliance	
CMPXC-N2C1	C+	B	SC	C	0ºC to 70ºC	+	RoHS Compliance
CMPXC-IN2C1	C+	B	SC	H	-40ºC to 85ºC	+	RoHS Compliance

Absolute Maximum Ratings

Parameter	Symbol	Min	Max	Units	Notes
Storage Ambient Temperature	T_{stg}	-40	+85	ºC	Exceeding the Absolute Maximum Ratings may cause irreversible damage to the device. The device is not intended to be operated under the condition of simultaneous Absolute Maximum Ratings, a condition which may cause irreversible damage to the device.
Relative Humidity - Storage	RH_S	5	90	%	
Relative Humidity - Operating	RH_O	5	85	%	
Module Supply Voltage	V_{CC3}	0	3.6	V	

Absolute Maximum Ratings: Control Function Logic Levels					
Parameter	**Symbol**	**Min**	**Max**	**Units**	**Notes**
Tx_DISABLE	Tx_Dis	0	V_{CC3}+0.5	V	LVTTL
Burst Mode SIGNAL Detect	Rx_SD	0	V_{CC3}+0.5	V	LVTTL
Rx_Reset	Rx_Reset	0	V_{cc3}+0.5	V	Signal Ended LVTTL input
Digital Rx_RSSI_Trigger Input	TRI	0	V_{CC3}+0.5	V	Single Ended LVTTL Input
I^2C Serial Data	SDA	0	V_{CC3}+0.5	V	Single Ended LVTTL I/O
I^2C Serial Clock	SCL	0	V_{CC3}+0.5	V	Single Ended LVTTL Input

Recommended Operating Conditions						
Parameter	**Symbol**	**Min**	**Typ**	**Max**	**Units**	**Notes**
Case Operating Temperature	T_{CASE}	0	-	+70	ºC	CMPXC-N2C1
		-40	-	+85		CMPXC-IN2C1
Module Supply Voltage	Vcc3	3.135	3.3	3.465	V	
Module Supply Current	Icc3	-	750	-	mA	
Power Consumption	P			3.5	W	

Transmitter Electrical Characteristics						
Parameter	**Symbol**	**Min**	**Typ**	**Max**	**Units**	**Conditions / Notes**
Tx Differential Input Impendence	Z_{IN}	90	100	110	Ω	
10Gb/s Tx Differential Input Amplitude	V_{IN10}	120	-	800	mV	
2.5Gb/s Tx Differential Input Amplitude	V_{IN1}	300	-	800	mV	
Tx_Dis = HIGH (Transmitter OFF / DISABLED)	V_{TDH}	2.0	-	V_{CC3}	V	LVTTL (Control INPUT)
Tx_Dis = LOW (Transmitter ON / ENABLED)	V_{TDL}	0	-	0.8	V	LVTTL (Control INPUT)

Receiver Electrical Characteristics						
Parameter	**Symbol**	**Min**	**Typ**	**Max**	**Units**	**Conditions / Notes**
Rx Differential Output Impendence	Z_{OUT}	90	100	110	Ω	
10Gb/s Rx_Data Differential Output Voltage Amplitude	V_{OUT10}	300	-	850	mV	LVCML
1.25Gb/s Rx_Data Differential Output Voltage Amplitude	V_{OUT1}	600	-	1600	mV	LVPECL
Rx_SD = HIGH (Receiver ON)	V_{OH}	2.0	-	V_{CC3}	V	LVTTL (Monitor OUTPUT)
Rx_SD = LOW (Receiver OFF)	V_{OL}	0	-	0.8	V	LVTTL (Monitor OUTPUT)
Ratesel/Reset=HIGH	VIH	1.9	-	V_{CC3}	V	Tri-level (Control INPUT)
Ratesel/Reset=Middle	VIM	1.2	-	1.6	V	Tri-level (Control INPUT)
Ratesel/Reset=LOW	VIL	0	-	0.9	V	Tri-level (Control INPUT)
TRI=HIGH	VIH	0.7*V_{CC3}	-	V_{CC3}	V	LVTTL (Control INPUT)
TRI=LOW	VIL	0	-	0.8	V	LVTTL (Control INPUT)

9.95328Gb/s Transmitter Optical Characteristics						
Parameter	**Symbol**	**Min**	**Typ**	**Max**	**Units**	**Notes**
Laser Type		1577nm CW EML				
Downstream Signal Rate		9.95328			Gb/s	
Average Launch Power	P_{OUT10}	5	-	8	dBm	
Optical Center Wavelength	λ_{10}	1575	-	1581	nm	
Spectral Width	$\Delta\lambda_{10}$	-	-	1.0	nm	
Side Mode Suppression Ratio	$SMSR_{10}$	30	-	-	dB	
Extinction Ratio	ER_{10}	8.2		-	dB	
Output Eye Diagram	Compliant with ITU-T G.987.2 &ITU-T G.9807.1					

2.48832Gb/s Transmitter Optical Characteristics						
Parameter	**Symbol**	**Min**			**Units**	**Notes**
Laser Type		1490nm CW DFB Laser				
Downstream Signal Rate		2.48832			Gb/s	
Average Launch Power	P_{OUT2}	3	-	7	dBm	
Optical Rise and Fall Time	Tr / Tf	-	-	200	ps	20% to 80%
Optical Center Wavelength	λ_1	1480	-	1500	nm	
Spectral Width	$\Delta\lambda_1$	-	-	1.0	nm	
Side Mode Suppression Ratio	$SMSR_1$	30	-	-	dB	
Extinction Ratio	ER_1	8.2	-	-	dB	
Output Eye Diagram	Compliant with ITU-T G.984.2					

9.95328/2.48832Gb/s Receiver Optical Characteristics						
Parameter	**Symbol**	**Min**	**Typ**	**Max**	**Units**	**Notes**
Receiver Type		1270nm APD/TIA Receiver				
Upstream Signal Rate		9.95328/2.48832			Gb/s	
Optical Center Wavelength	λ	1260	-	1280	nm	
XGS-PON Receiver Sensitivity[1]	P_{IN}	-	-	-29	dBm	
XG-PON Receiver Sensitivity[2]	P_{IN}	-	-	-30.5	dBm	
XGS-PON Receiver Optical Overload*	P_{IN}(SAT)	-8	-	-	dBm	
XG-PON Receiver Optical Overload*	P_{IN}(SAT)	-10	-	-	dBm	
Damaged Input Optical Power	P_d	-	-	-5	dBm	
Rx_SD Assert	P_A	-45	-	-31	dBm	
Rx_SD De Assert	P_D	-45	-	-31	dBm	
Rx_SD Hysteresis	P_{Hy}	0.5	-	7	dBm	
Note : 1: BER@10^{-3} *; Test Condition: PRBS: 2^{31}-1, ER=6 dB 2: BER@10^{-4} *: Test Condition: PRBS: 2^{23}-1, ER=8.2 dB						

1.24416Gb/s Receiver Optical Characteristics						
Receiver Type		1310nm Burst APD/TIA Receiver				
Upstream Signal Rate		1.24416			Gb/s	
Optical Center Wavelength	λ	1290	1310	1330	nm	
Receiver Sensitivity [1]	P_{IN}	-	-	-30	dBm	
Receiver Sensitivity [2]		-	-	-32	dBm	
Receiver Optical Overload *	P_{IN}(SAT)	-12	-	-	dBm	
Damaged Input Optical Power	P_d	-	-	-5	dBm	
Rx_SD Assert	P_A	-45	-	-32.5	dBm	
Rx_SD De Assert	P_D	-45	-	-32.5	dBm	
Rx_SD Hysteresis	P_{Hy}	0.5	-	7	dB	
Note : 1：BER@10^{-10}, PRBS 2^{23}-1, ER=10dB 2：BER@10^{-4}, PRBS 2^{23}-1, ER=10dB						

XGS-PON Normal Time Diagram

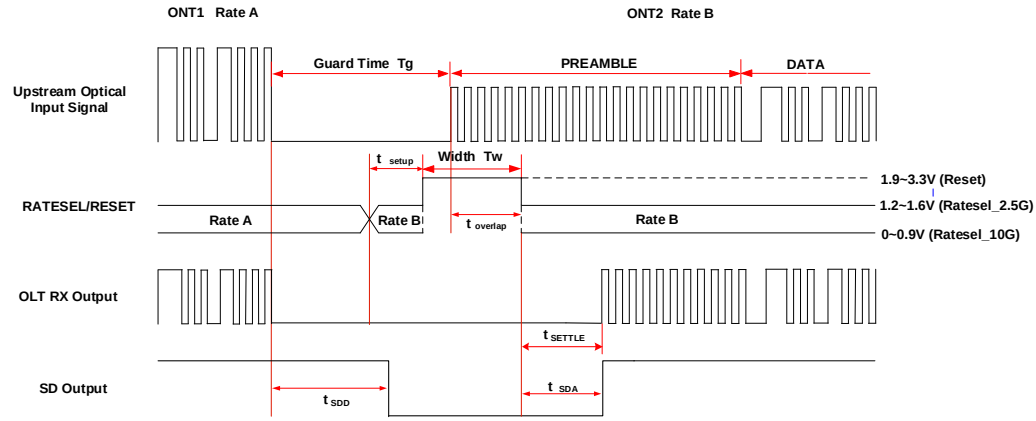

XGS-PON Ranging- Time Diagram

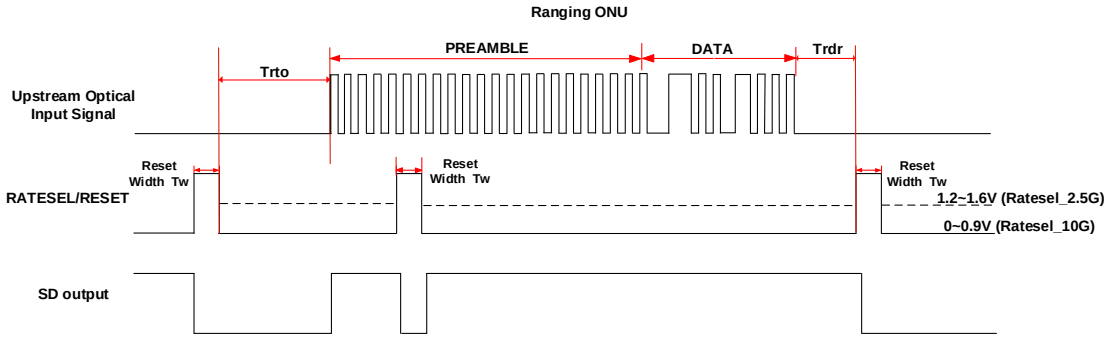

GPON Time Diagram

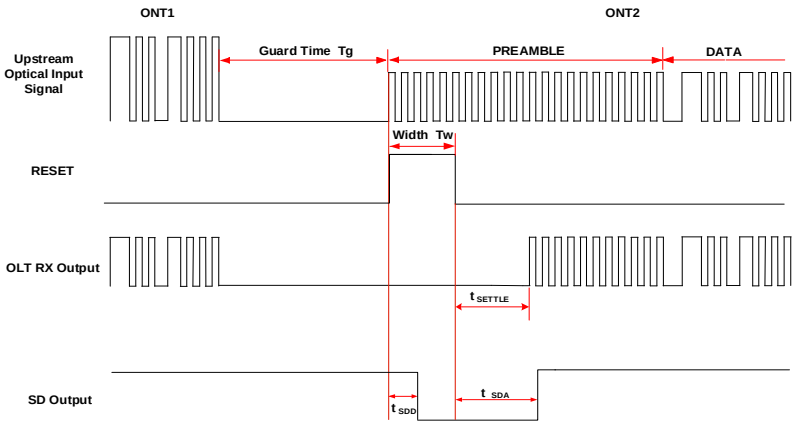

Receiver Timing Diagram						
Parameter	**Symbol**	**Min**	**Typical**	**Max**	**Units**	**Notes**
Guard Time (GPON)	Tg	25.6	-	-	ns	
Guard Time (XGS-PON)	Tg	51.2	-	-	ns	
Reset Pulse Width (GPON)	Tw	25.6	-	-	ns	
Reset Pulse Width (XGS-PON)	Tw	25.6	-	-	ns	Note 1
Reset to Ranging ONU Optical Time	Trto	0			ns	
Reset Delay Time During Ranging	Trdr	0			ns	
Reset time overlapping preamble	t_overlap	0	-	-	ns	
Setup time of rate level for following burst	t_setup	5	-	-	ns	
Burst Signal Detect Assert (GPON)	T_SDA	-	-	25.6	ns	
Burst Signal Detect Assert (XGS-PON)	T_SDA	-	20	100	ns	
Burst Signal Detect De-assert (GPON)	T_SDD	-	12.8	25.6	ns	
Burst Signal Detect De-assert (XGS-PON)	T_SDD	-	-	100	ns	Note 2
Burst Mode Receiver Setting Time (GPON)	Tsettle	-	-	25.6	ns	
Burst Mode Receiver Setting Time (XGS-PON)	Tsettle	-	100	-	ns	

Note 1: Reset pulse is required to be partially inside preamble.

Note 2: Auto reset function is applied. Signal detect de-assert time is about 100ns forced by auto reset, and will short to about 20ns with external Reset pulse.

Digital RSSI Sample/Hold Timing

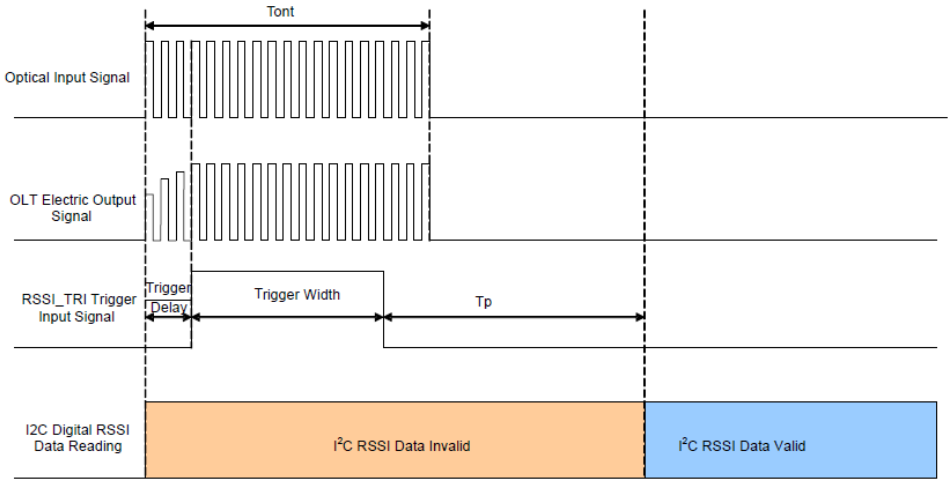

Digital RSSI Sample/Hold Timing						
Parameter	**Symbol**	**Min**	**Typ**	**Max**	**Units**	**Notes**
Optical Input Signal Width	T_{ont}	525	-	-	ns	
RSSI Trigger Delay	T_{tri} (TRI Delay)	25	-	3000	ns	
RSSI Trigger Width	T_{I2C} (TRI Width)	500	-	$T_{ont} - T_{tri}$	ns	
I^2C Protect Time	T_p	500	-	-	μs	
RSSI Monitor Range	P_{mon}	-8	-	-29	dBm	XGS-PON
		-10	-	-31	dBm	XGPON
		-12	-	-32	dBm	GPON
RSSI Precision	P_{rssi}	-3	+/-2	3	dB	
$T_{tri}+T_{i2c}<T_{ont}$						

2-Wire Serial Memory Map

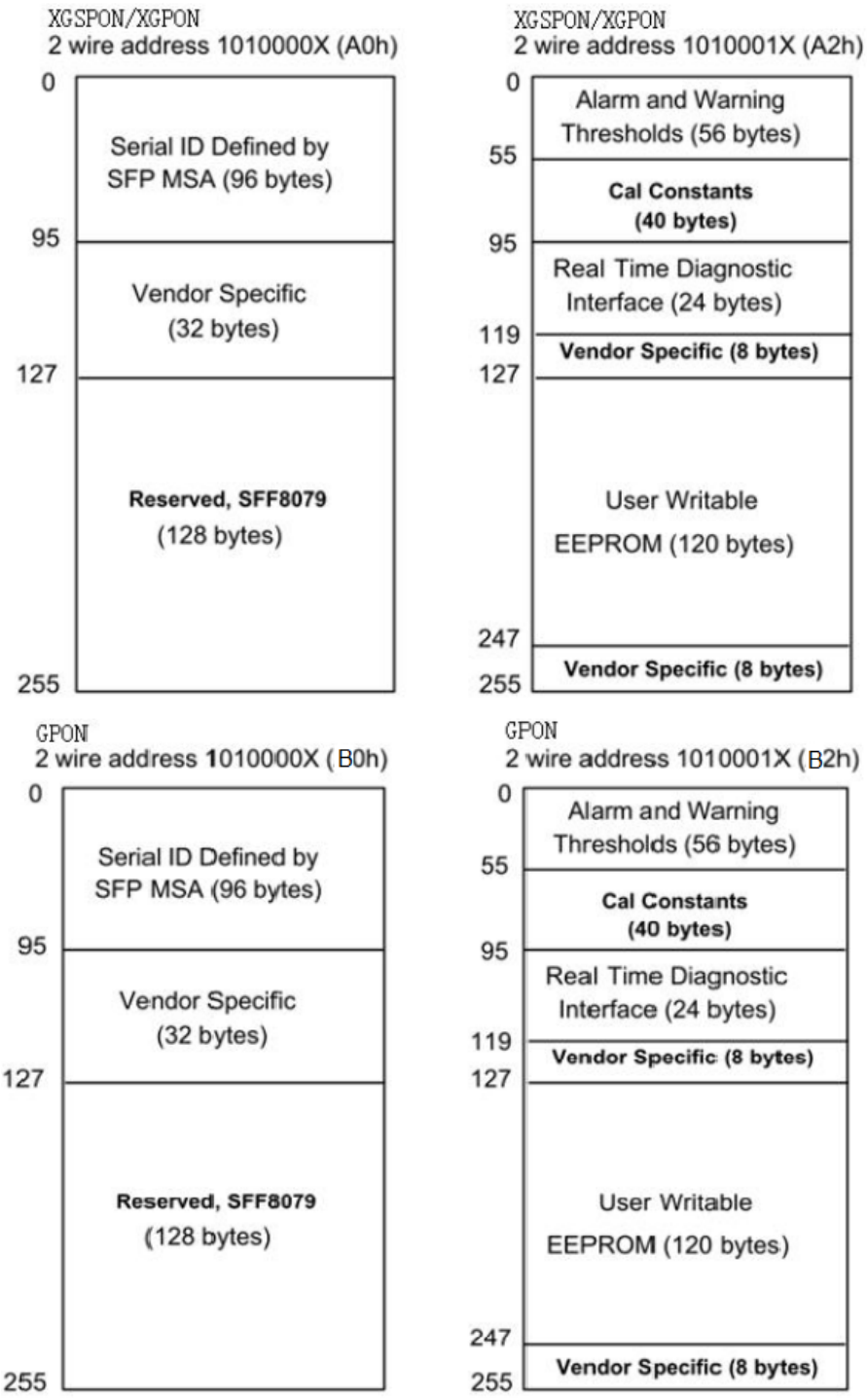

XGSPON/XGPON EEPROM serial ID memory contents (A0h)				
Address	**Bytes**	**Name**	**Description**	**Hex Value**
0	1	Identifier	SFP Plus	03
1	1	Ext. Identifier	Serial ID module	04
2	1	Connector	SC connector	01
3-10	8	Transceiver	Combo OLT	00 00 00 00 00 00 00 00
11	1	Encoding	NRZ	03
12	1	BR Nominal	9.953 Gbps	64
13	1	Rate Identifier	Reserved	00
14	1	Length (SMF, km)	20km	14
15	1	Length (SMF)	10km	C8
16	1	Length (50um)	Not support	00
17	1	Length (62.5um)	Not support	00
18	1	Length (Copper)	Not support	00
19	1	Length (OM3)	Not support	00
20-35	16	Vendor Name	SFP vendor name (ASC II)	OEM
36	1	Transceiver	Unallocated	00
37-39	3	Vendor OUI	SFP vendor IEEE company ID	AC 4A FE
40-55	16	Vendor PN	Part number	FD-N2C1-XGS-B+ FD-N2C1-XGS-C+
56-59	4	Vendor Rev	Revision level for part number	Customized
60-61	2	Wavelength	1577nm	06 29
62	1	Unallocated		00
63	1	CC_BASE	Check code (0 to 62)	
64-65	2	Options	Cooled LD, power level 3, limiting receiver output	24
			TxDisable, TxFault, SD implemented	1C
66	1	BR, max	Upper bit rate margin, unit of %	00
67	1	BR, min	Lower bit rate margin, unit of %	00
68-83	16	Vendor SN	Serial number provided by vendor	
84-91	8	Date Code	Vendor’s manufacturing date code	
92	1	Diagnostic Monitoring Type	Internal cal, Average power	68
93	1	Enhanced Options	Optional alarm/warning implemented. Soft TX_DIS, TX_FAULT implemented	E0
94	1	SFF Compliance		08
95	1	CC_EXT	Check code (64 to 94)	
96-127	32	Vendor Specific	Vendor Specific EEPROM	
128-255	128	Reserved		

GPON EEPROM serial ID memory contents (B0h)				
0	1	Identifier	SFP Plus	03
1	1	Ext. Identifier	Serial ID module	04
2	1	Connector	SC Connector	01
3-10	8	Transceiver	Combo OLT	00 00 00 00 00 00 00 00
11	1	Encoding	NRZ	03
12	1	BR, Nominal	2.5Gbps	19
13	1	Rate Identifier	Reserved	00
14	1	Length (SMF, km)	20km	14
15	1	Length (SMF)	20km	C8
16	1	Length (50um)	Not support	00
17	1	Length (62.5um)	Not support	00
18	1	Length (Copper)	Not support	00
19	1	Length (OM3)	Not support	00
20-35	16	Vendor name	SFP vendor name (ASC II)	OEM
36	1	Transceiver	Unallocated	00
37-39	3	Vendor OUI	SFP vendor IEEE company ID	AC 4A FE
40-55	16	Vendor PN	Part number	FD-N2C1-XGS-B+ FD-N2C1-XGS-C+
56-59	4	Vendor Rev	Revision level for part number	Customized
60-61	2	Wavelength	1490nm	05 D2
62	1	Unallocated		00
63	1	CC_BASE	Check code (0 to 62)	
64-65	2	Options	Uncooled LD, Power Level 2, Limiting Receiver Output	20
			TxDisable, TxFault, SD implemented	1C
66	1	BR, max	Upper bit rate margin, units of %	00
67	1	BR, min	Lower bit rate margin, units of %	00
68-83	16	Vendor SN	Serial number provided by vendor	
84-91	8	Date Code	Vendor’s manufacturing date code	
92	1	Diagnostic Monitoring Type	Internal Cal, Average Power	68
93	1	Enhanced Options	Optional Alarm/warning implemented. Soft TX_DIS, TX_FAULT implemented.	E0
94	1	SFF Compliance		08
95	1	CC_EXT	Check code (64 to 94)	
96-127	32	Vendor Specific	Vendor Specific EEPROM	
128-255	128	Reserved		

XGS-PON Real Time Diagnostic Registers (A2h)			
Address	**Bit**	**Name**	**Description**
96	ALL	Temperature MSB	Internally measured module temperature. (-40~+95℃)
97	ALL	Temperature LSB	
98	ALL	Vcc MSB	Internally measured supply voltage in transceiver. (3.0~3.6V)
99	ALL	Vcc LSB	
100	ALL	TX Bias MSB	Internally measured TX Bias Current, the bias current measured as 4uA, which reflect to 16 bits integer range: 0~262mA.
101	ALL	TX Bias LSB	
102	ALL	TX Power MSB	Measured TX output power. Range: -34~+11.2dBm. Unit:0.2uW
103	ALL	TX Power LSB	
104	ALL	RX Power MSB	Measured RX input power. Range: -37~+8.2dBm.Unit:0.1uW
105	ALL	RX Power LSB	
106	ALL	Reserved MSB	Reserved for 1st future definition of digitized analog input.
107	ALL	Reserved LSB	Reserved for 1st future definition of digitized analog input.
108	ALL	Reserved MSB	Reserved for 2nd future definition of digitized analog input.
109	ALL	Reserved LSB	Reserved for 2nd future definition of digitized analog input.
Converted analog values. Calibrated 16 bit data.			

GPON Real Time Diagnostic Registers (B2h)			
Address	**Bit**	**Name**	**Description**
96	ALL	Temperature MSB	Internally measured module temperature. (-40~+95℃)
97	ALL	Temperature LSB	
98	ALL	Vcc MSB	Internally measured supply voltage in transceiver. (3.0~3.6V)
99	ALL	Vcc LSB	
100	ALL	TX Bias MSB	Internally measured TX Bias Current, the bias current measured as 4uA, which reflect to 16 bits integer range: 0~262mA.
101	ALL	TX Bias LSB	
102	ALL	TX Power MSB	Measured TX output power. Range: -34~+11.2dBm.Unit:0.2uW
103	ALL	TX Power LSB	
104	ALL	RX Power MSB	Measured RX input power. Range: -37~+8.2dBm.Unit:0.1uW
105	ALL	RX Power LSB	
106	ALL	Reserved MSB	Reserved for 1st future definition of digitized analog input.
107	ALL	Reserved LSB	Reserved for 1st future definition of digitized analog input.
108	ALL	Reserved MSB	Reserved for 2nd future definition of digitized analog input.
109	ALL	Reserved LSB	Reserved for 2nd future definition of digitized analog input.
Converted analog values. Calibrated 16 bit data.			

EEPROM A2 RSSI Selection			
Address	**Bit**	**Name**	**Description**
118	7	RSSI Select	Writing “0” for XGS-PON/XGPON RSSI Monitor; Writing “1” for GPON RSSI Monitor. Default power up value is “0”.
118	6	RSSI/TX_disable Select	When set “0” ,PIN9 input as TX_Disable input; When set “1”, PIN9 as RSSI input. Default power up value is “0”.

Register 118	Bit6	Bit7	Register 118 is used to control Hardware TX-Dis and RSSI switch
TX-Disable Mode	0	X	GPON and XGSPON Hardware TX-Dis state is control by PIN9 input signal. When PIN9 is High level GPON and XGSPON Hardware TX-Dis state is disable, When PIN9 is LOW level GPON and XGSPON Hardware TX-Dis state is enable,
RSSI Mode	1	1	GPON RSSI is triggered by PIN9 . GPON and XGSPON Hardware TX-Dis state is always enable
	1	0	XGSPON RSSI is triggered by PIN9. GPON and XGSPON Hardware TX-Dis state is always enable

Note: When bit6 switch from 0 to 1,the module will maintain the Tx Disable Pin state before switching. That is, if the module is turn-off before switching, then it still turn off. When bit6 switch from 1 to 0,the module will not maintain the Trigger Pin state before switching.

XGSPON OLT Laser Soft TX-Dis	
Hardware TX-Dis state	A2h Register 110 Bit 6（Soft TX-Disable control）
Enable	Read /Write Bit to control software disable laser .Write “0” enable XGSPON Laser，write“1” disable XGSPON Laser
Disable	The XGSPON laser is always off

GPON OLT Laser Soft TX-Dis	
Hardware TX-Dis state	B2h Register 110 Bit 6（Soft TX-Disable control）
Enable	Read /Write Bit to control software disable laser .Write “0” enable GPON Laser，write“1” disable GPON Laser
Disable	The GPON laser is always off

Pin Assignment

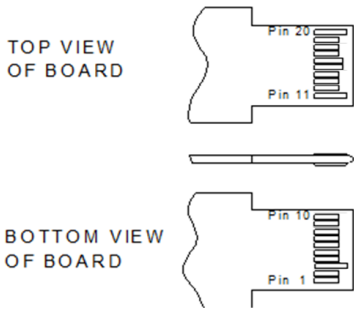

Pin Description			
Pin	**Name**	**Description**	**Notes**
1	GPON_TD+	Transmit Non-Inverted 2.48832Gb/s Data Input; AC coupled inside the module.	
2	GPON_TD-	Transmit Inverted 2.48832Gb/s Data Input; AC coupled inside the module.	
3	GND	Module Ground.	
4	SDA	2-Wire Serial Interface Data Line, with the pull-up resistance: 4.7kΩ～10kΩ.	
5	SCL	2-Wire Serial Interface Clock, with the pull-up resistance: 4.7kΩ～10kΩ.	
6	GPON_RD-	Receive Burst Mode Inverted 1.2488Gb/s Data Output; DC coupled inside the module.	1
7	Ratesel/Reset	Three-level input combining “Rate Select” and “Reset” information. Set high level to reset TIA/LA. Middle level indicates 2.5G data rate. Low level indicates 10G data rate.	
8	XGS-PON_SD	Receiver Signal Detect Indicator for XGS-PON/XGPON Receiver, when Low, indicates insufficient optical input power to the module; when High, means in normal.	
9	Trig/Txdis	Two signals multiplex, which selected by the register. Receiver signal strength indication trigger for Digital RSSI. As TXdisable, when Low level, the transceiver port work in normal; when High level, both 10Gb/s and 2.5Gb/s are disabled.	
10	GPON_RD+	Receive Burst Mode Non-Inverted 1.2488Gb/s Data Output; DC coupled inside the module.	1
11	GND	Module Ground.	
12	XGS-PON_RD-	Receive Burst Mode Inverted 9.953 or 2.48832Gb/s Data Output. DC coupled inside the module.	
13	XGS-PON_RD+	Receive Burst Mode Non-Inverted 9.953 or 2.48832Gb/s Data Output. DC coupled inside the module.	
14	GPON_SD	Receiver Signal Detect Indicator for G-PON Receiver. When Low, indicates insufficient optical input power to the module. When High, means in normal.	
15	VCC3_RX	+3.3V power supply for RX. Tolerance: 3.3V±5%.	
16	VCC3_TX	+3.3V power supply for TX. Tolerance: 3.3V±5%.	
17	GPON_Reset	Burst Mode Receiver Reset for GPON Receiver. When HIGH, indicates the receiver is OFF/being reset.	
18	XGS-PON_TD+	Transmit Non-Inverted 9.95328Gb/s Data Input; AC coupled inside the module.	
19	XGS-PON/_TD-	Transmit Inverted 9.95328Gb/s Data Input; AC coupled inside the module.	
20	GND	Module Ground.	
Note 1: When GPON_RD+/- set as LVPECL, and the module without the pull-down resistances. The differential signal amplitude must be satisfied with the Electrical Characteristics.			

Electrical Interface

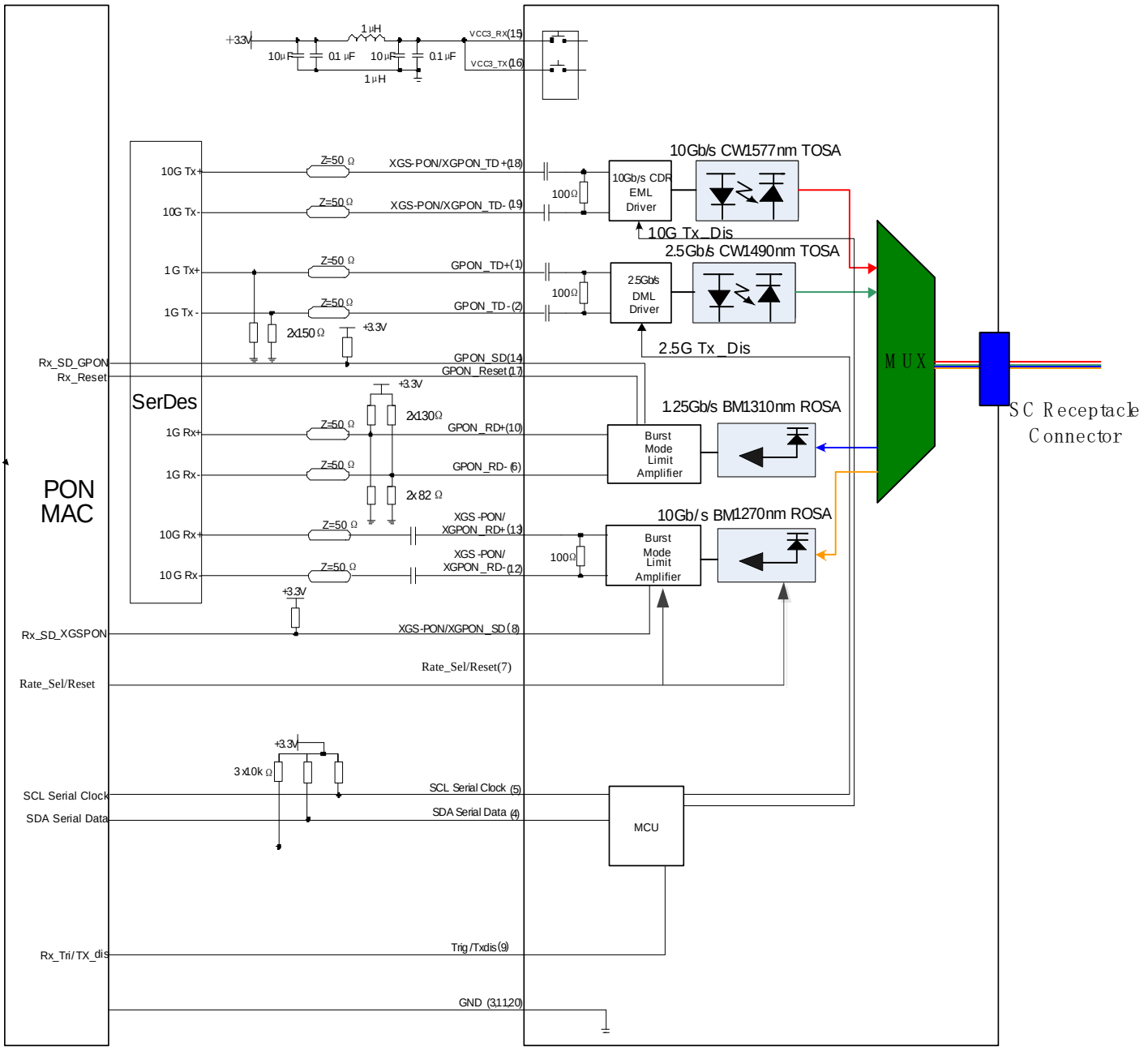

Mechanical Dimensions

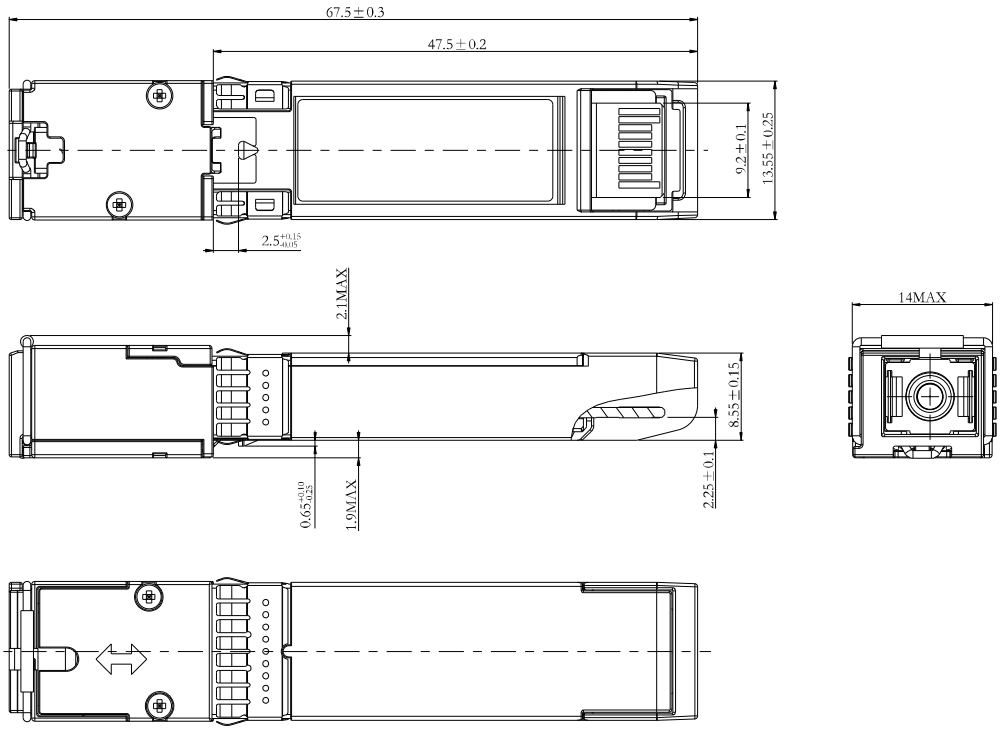

NOTES:
1.TOLERANCE: +/-0.1MM
2.OTHERS ACCORDING WITH SFF-8074i/SFF-8432 OR CUSTOMER SPEC.
3.LIGHT PORT ACCORDING WITH FIBER CONNECTOR SPEC.

SFP+ Connector Dimensions

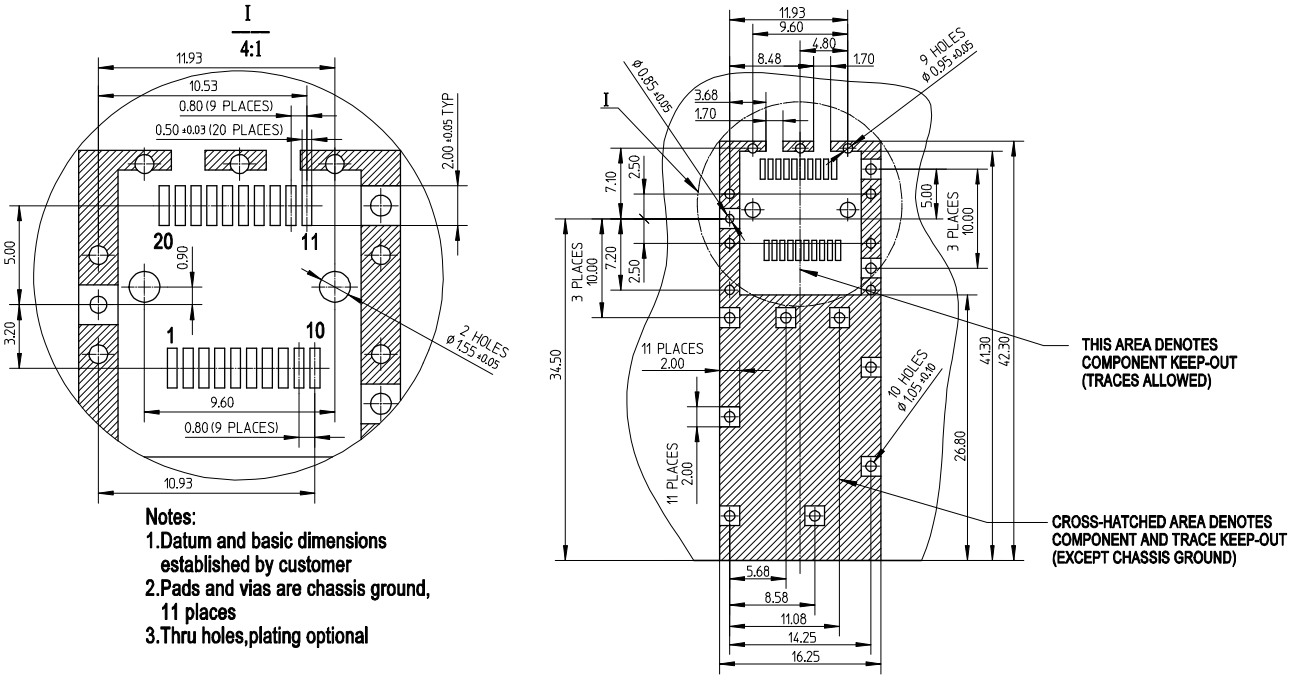

Warnings

Handling Precautions:

This device is susceptible to damage as a result of electrostatic discharge (ESD). A static free environment is highly recommended. Follow guidelines according to proper ESD procedures.

Laser Safety:

Radiation emitted by laser devices can be dangerous to human eyes. Avoid eye exposure to direct or indirect radiation.

EYE SAFETY

Complies with 21 CFR 1040.10 and 1040.11 except for conformance with IEC 60825-1 Ed.3., as described in Laser Notice No. 56, dated May 8, 2019.
Complies with IEC 60825-1:2014, EN 60825-1:2014+A11:2021 and IEC 60825-2: 2021, EN 60825-2:2004+A1:2007+A2:2010. Class 1 laser safety compliant.
INVISIBLE LASER RADIATION.

CAUTION:

Use of controls or adjustments or performance of procedures other than those specified herein may result in hazardous radiation exposure.